MST PARTS LIST

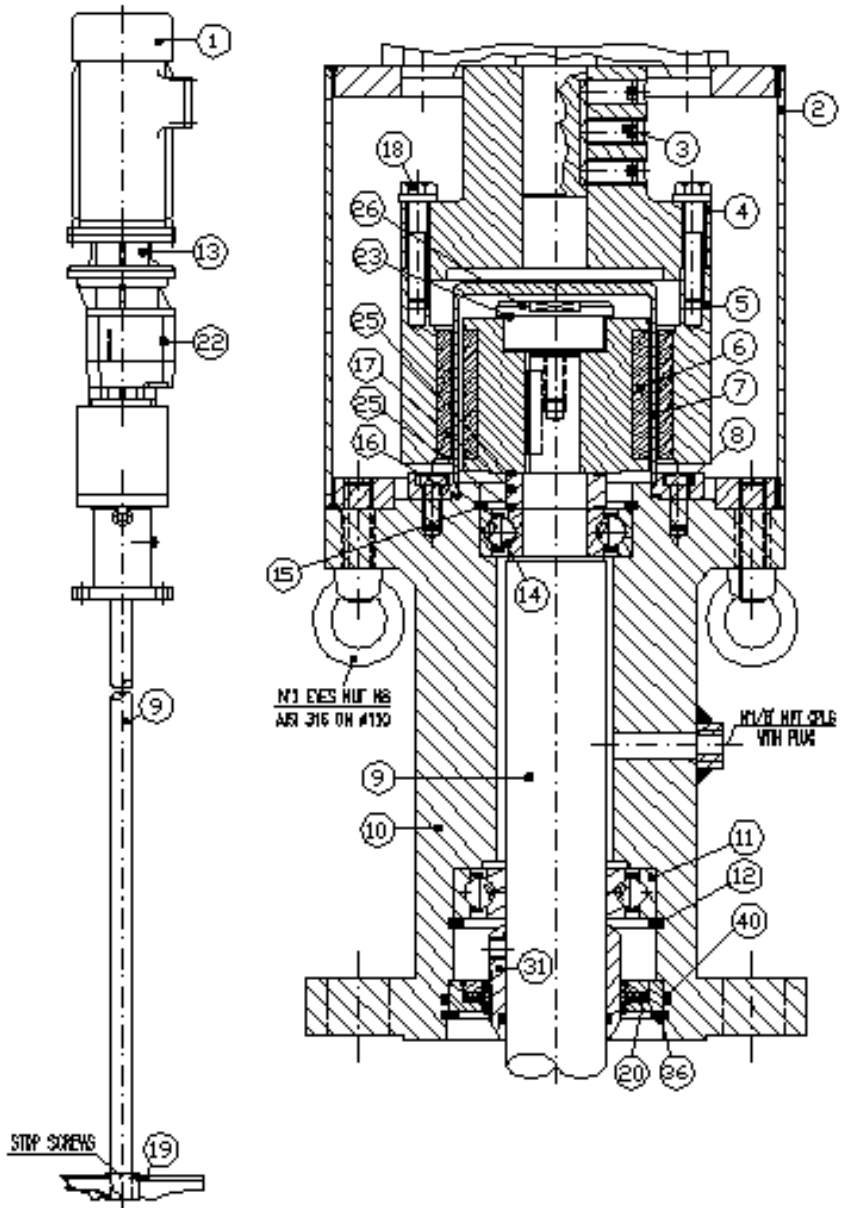

Part No.	Description
1	Motor
2	Magnet Housing
3	Stop Screw
4	Coupling
5	Outer Rotor
6	Inner Rotor
7	Shroud
8	Cap Screw
9	Shaft
10	Bearing Housing
11**	Lower Bearing
12**	Circlip
13	Adapter
14**	Upper Bearing
15**	Circlip
16**	O'Ring
17	Spacer
18	Hex Screw
19	Impeller
20	Lip Seal
22	Gearbox
23	Gasket
25	Gasket
26	Screw
31	O'Ring with Sleeve
36**	Circlip
40**	O'Ring

**** Recommended Spare Parts**